SIAMP

Sanitary expertise & water friendly

Product Guide

Wall Frames

Flush Plates

Concealed Cisterns

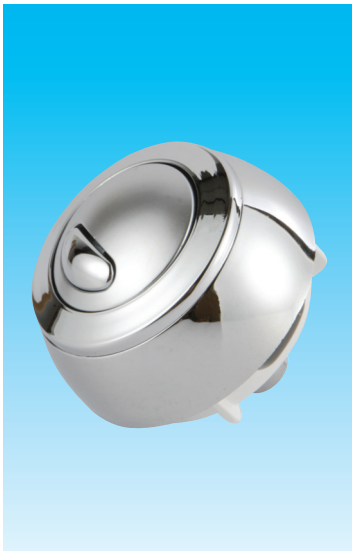

Push Buttons

Siphons

Flushing Valves

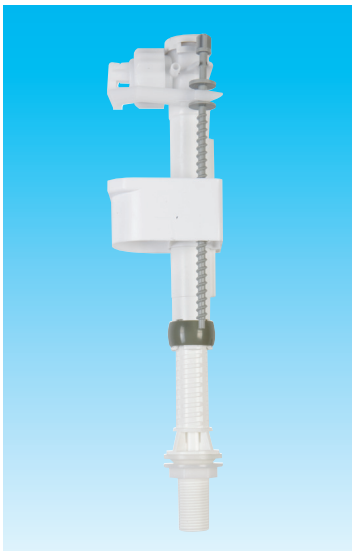

Inlet Valves

Spares

WRAS APPROVED PRODUCT

Supplying fittings to the most popular bathroom brands in the UK

Quality Guarantee...

The Siamp brand name gives a guarantee of confidence for all new equipment and products which meet our seven strict requirements:

1. Patented innovative technology
2. Significantly improved ease of use
3. Controlled environmental impact
4. Quality which conforms to our standards and regulations
5. Performance checked with external test houses and consultants worldwide
6. Easy installation
7. Simplified maintenance

Assurance...

The presence of the Siamp brand is a guarantee of performance and respect for the environment.

scan to view online technical information

Welcome to Siamp

Founded in 1947, Siamp is a world leader in the design, manufacture and distribution of sanitary equipment.

Siamp has been innovating the sanitary fittings industry for over 60 years with commitment to research and development. Siamp continues to dominate the market with innovative technical solutions developing efficient equipment which guarantees hygiene and comfort with responsible water management.

The prime objective of Siamp UK Ltd is to provide a premium service to its UK customers, supplying product from stock with 48 hour delivery turnaround with targeted marketing campaigns to stimulate end user sales and a dedicated technical support programme.

Our commitment to service positions Siamp as the number one UK supplier of sanitary equipment.

6 reasons to choose Siamp

- ✔ The widest used fittings in the UK
- ✔ Trade trusted
- ✔ Quality guaranteed
- ✔ In stock
- ✔ Technical support
- ✔ All WRAS approved

Contents

4 - 5..... Wall Frames
6 - 7..... Flush Plates
8 - 9..... Concealed Cisterns
10 ..... Siphons
11 - 13..... Component Packs
14 - 16..... Flushing Valves
17 - 20..... Inlet Valves
21 ..... Spares
22 ..... Push Buttons

Samoa Wall Frame Pack

Our Samoa, Wall Hung WC pack is an ideal solution for professionals. Our all in one pack is compact for easy transportation and offers high quality approved products all in one box.

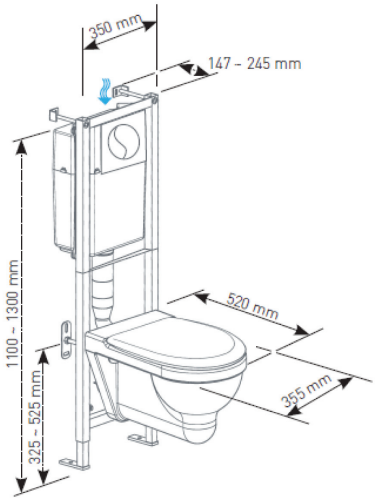

PRODUCT DESCRIPTION

- Verso BCM 350, wall hung frame, front actuation, complete delivery with Ying Yang white double flush command plate.
- White wall hung ceramic pan.
- White polyproplene toilet seat, top fixing stainless steel hinges, 1.7kg.
- Upgrade your Samoa pack by adding a designer push plate. See page 7 for our wide selection.

H: 605mm x W: 562mm x D: 385mm

Complete Samoa Pack (31185815)

scan to view online technical information

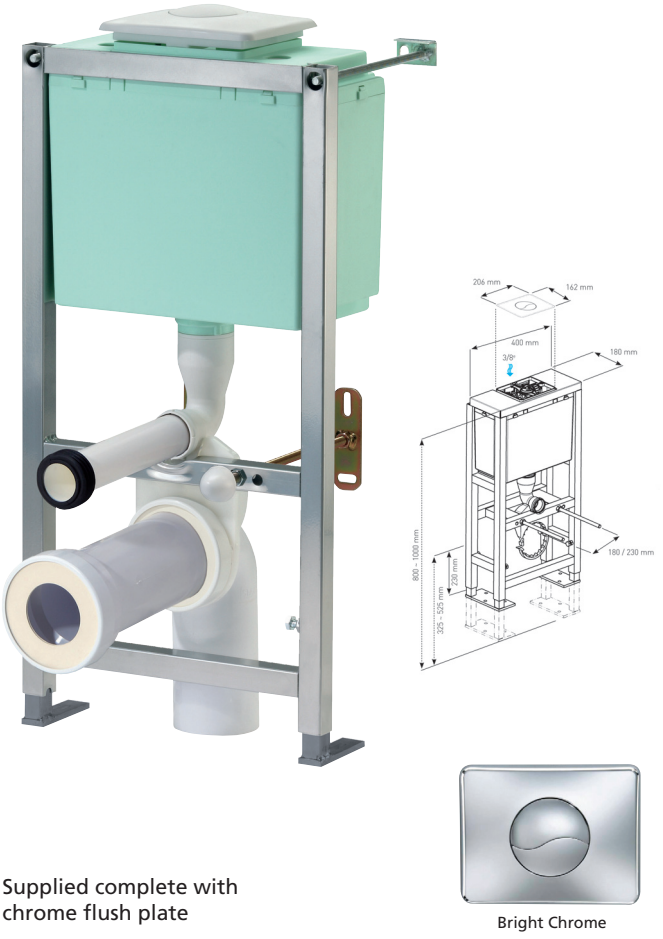

Supplied complete with chrome flush plate

Bright Chrome

BCM 800 (with plate) (31116710)

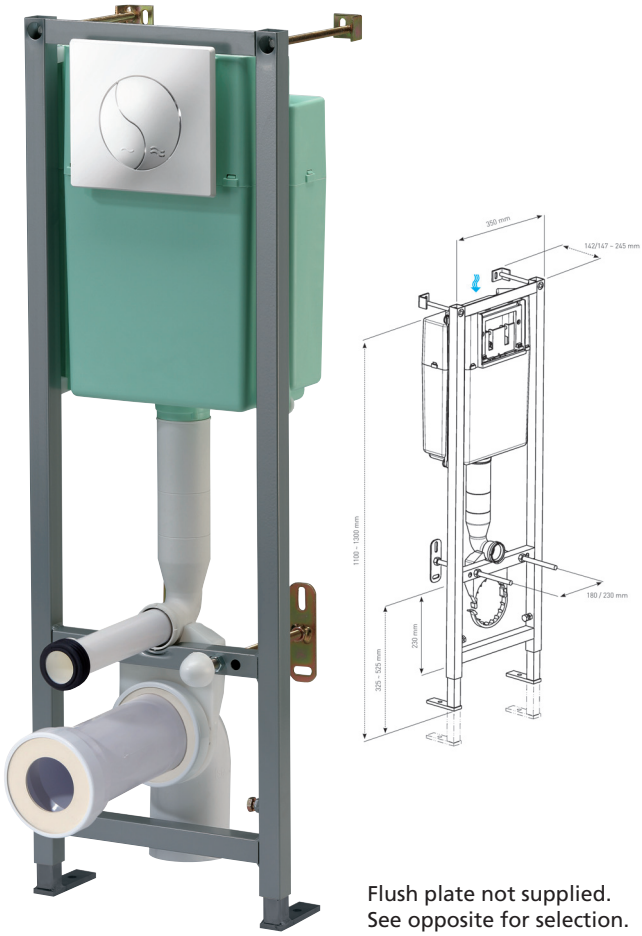

Flush plate not supplied.
See opposite for selection.

BCM 350 (without plate) (31231513)

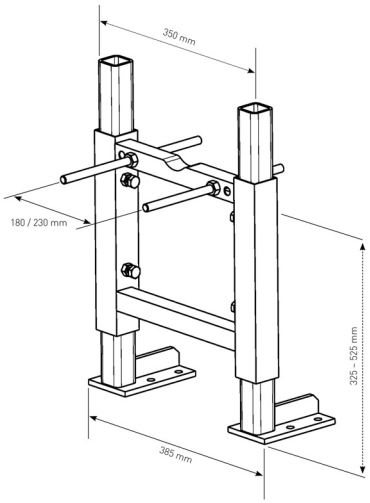

SCU 350 WC Frame Only (31250510)

Welcome to our collection of flush plates

Our collection of flush plates covers both traditional design and fashion led styles to suit both commercial and domestic uses. We have a choice of styles that cover a wide selection of combinations in various colour options that are compatible with the BCM350 mounting frame. With all our plates, we offer a great look with the guarantee of quality that you associate with Siamp.

Commercial Flush Plates

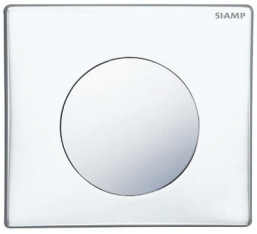

MONO-VOLUME Single Flush White (31183010)

MONO-VOLUME Single Flush Chrome Matt (31188010)

MONO-VOLUME Anti-Vandal Single Flush Inox (31188810)

SMART Bright Chrome (aluminium) (31187410)

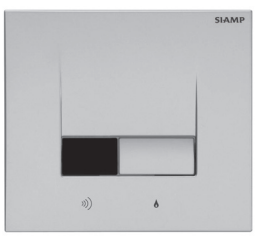

SMART MVI Infra-Red Matt Chrome (31195010)

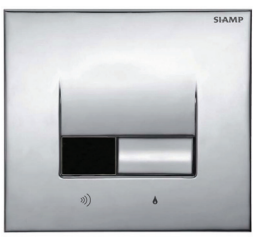

SMART MVI Infra-Red Bright Chrome (31195110)

Essentials Flush Plates

Lemon White (31181010)

Lemon Chrome/Matt (31181410)

Lemon Matt/Chrome (31181310)

YY White (31180010)

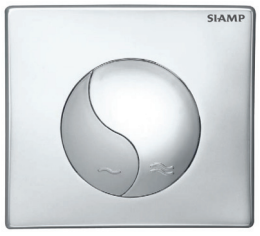

YY Chrome/Matt (31185310)

YY Matt/Chrome (31185010)

YY All Chrome (31185316)

scan to view online technical information

Designer Flush Plates

Reflet 90 Clear
(31193010)

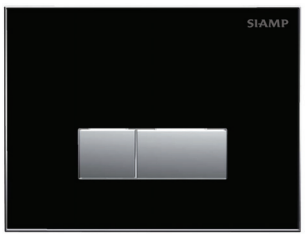

Reflet 90 Black
(31193110)

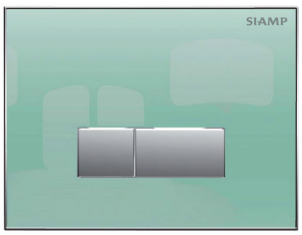

Reflet 90 Natural Green
(31193210)

Reflet 360 Clear
(31198010)

Reflet 360 Black
(31198110)

Reflet 360 Natural Green
(31198210)

Segment White
(31171010)

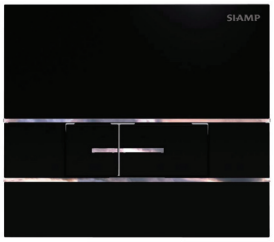

Segment Black
(31171110)

Segment Inox/S Steel
(31171210)

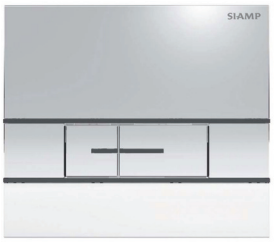

Segment Bright
(31172210)

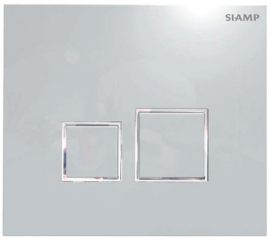

Square White
(31204010)

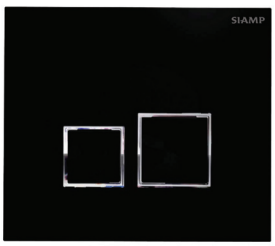

Square Black
(31204110)

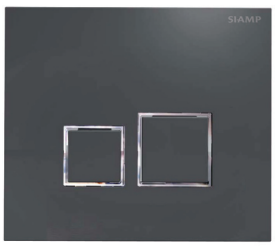

Square Inox/S Steel
(31204210)

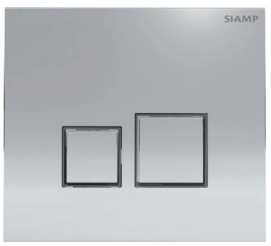

Square Bright
(31207210)

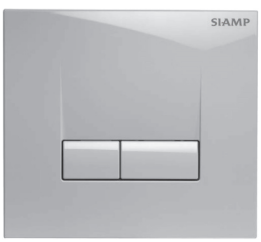

SMARTy White
(31191010)

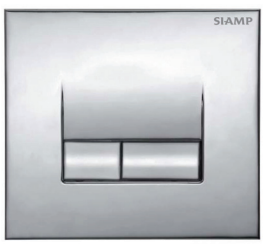

SMARTy Chrome/Matt
(31191210)

SMARTy Matt/Chrome
(31191110)

SMARTy Wenge
(31191310)

Concealed Cisterns

The Siamp concealed cisterns are the most widely used in the world. Our Intra wall mounted range comes with both side and bottom supply.

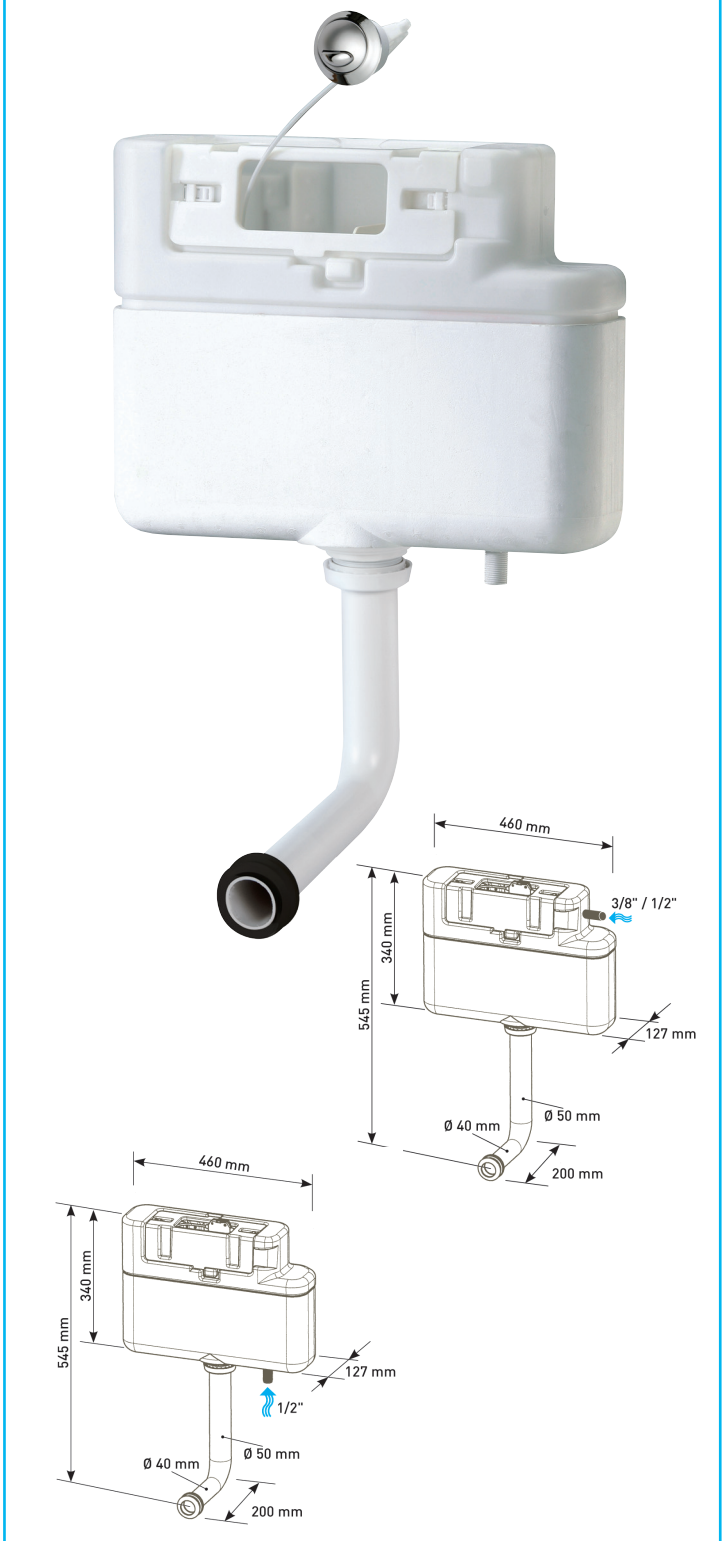

Intra Concealed Cistern Side Inlet (31014810)
Intra Concealed Cistern Bottom Inlet (31014710)

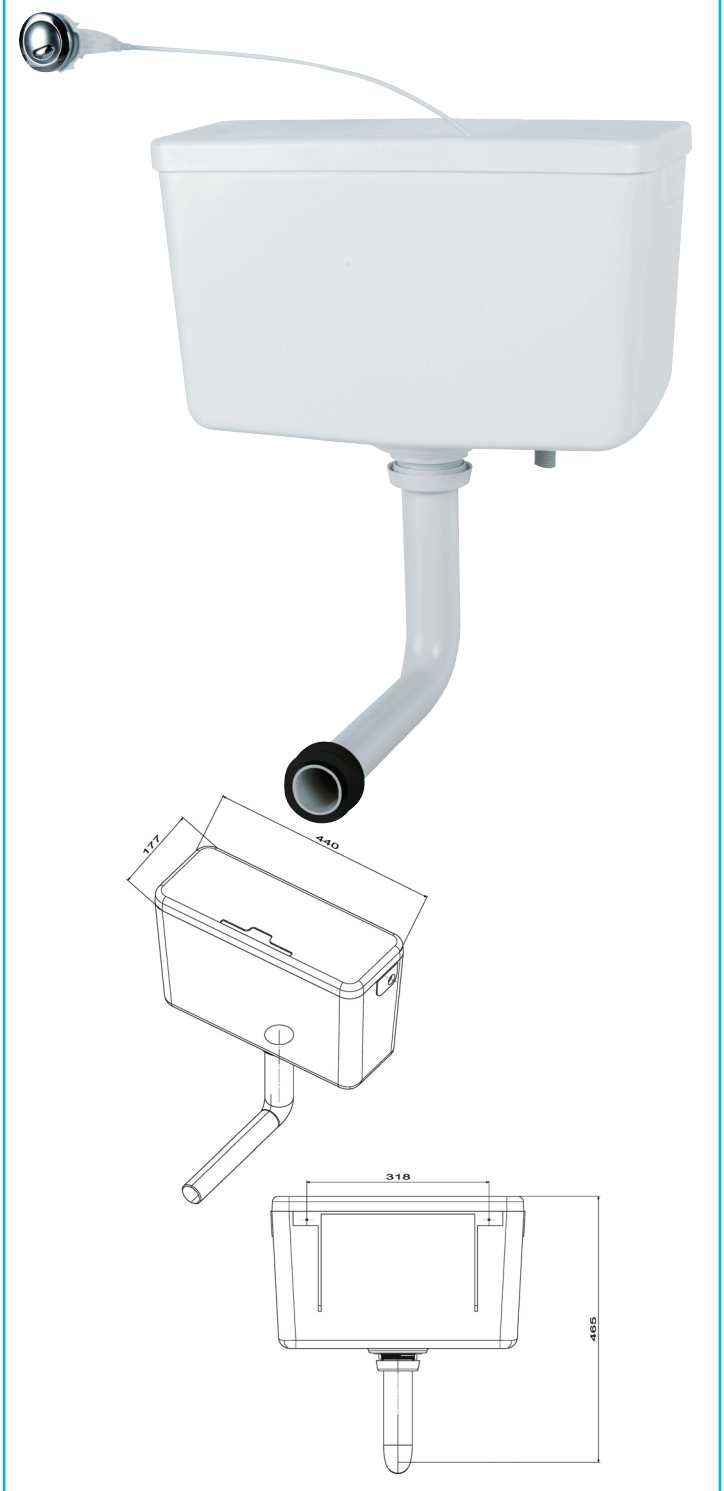

True Flow Concealed Cistern Bottom Inlet (31014718)

scan to view online technical information

The Intra bottom supply model is available with a pneumatic valve option. It has a large dual flush button for easy flushing.

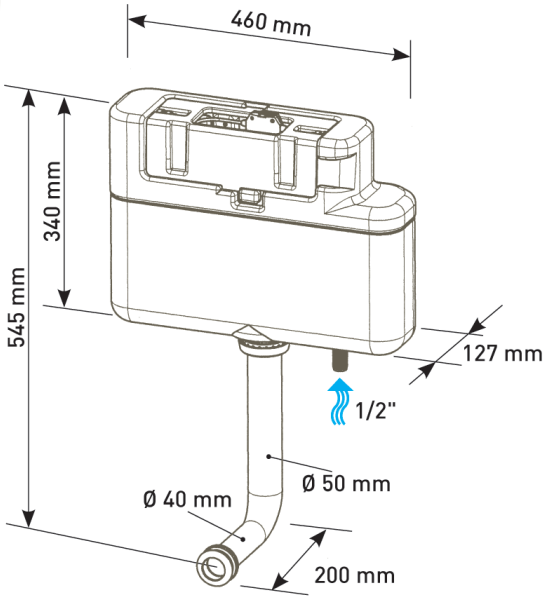

Intra Pneumatic Concealed Cistern Bottom Inlet (31014411)
Dual Flush Pneumatic Button Chrome (31255110)

Siphons

The Siamp Uni-Siphon is unique in that it replaces the need for having to stock multiple sizes of siphons. Adjustable from 7½" to 9½" and manufactured to the very high and exacting WRAS standards, Siamp Uni-Siphons suit all applications including high level, low level and close coupled. Siamp Uni-Siphons are supplied two-part for quick and easy separation from the down leg enabling servicing to be carried out without the need to dismantle the cistern and turn off the water supply.

UNISIPHON

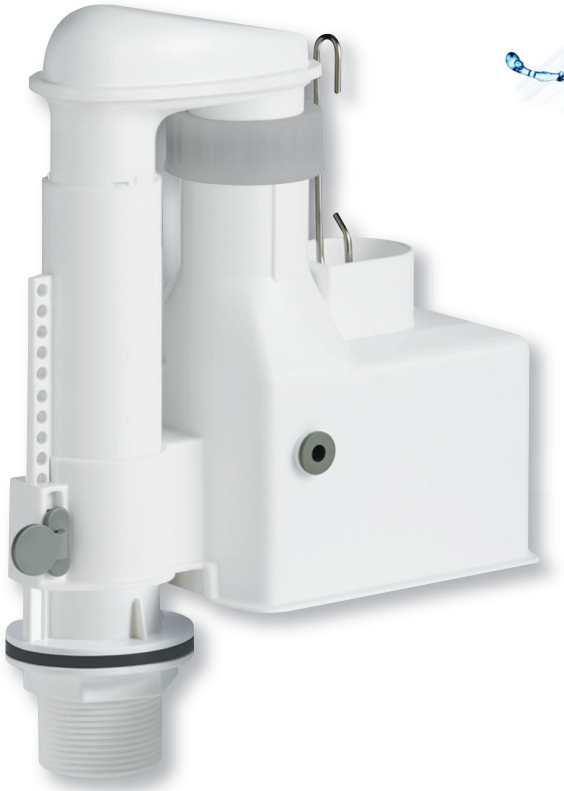

easy to install
easy to maintain
universal application
7½" to 9½" telescopic siphon
significant reduction in stockholding
always the right product for the job

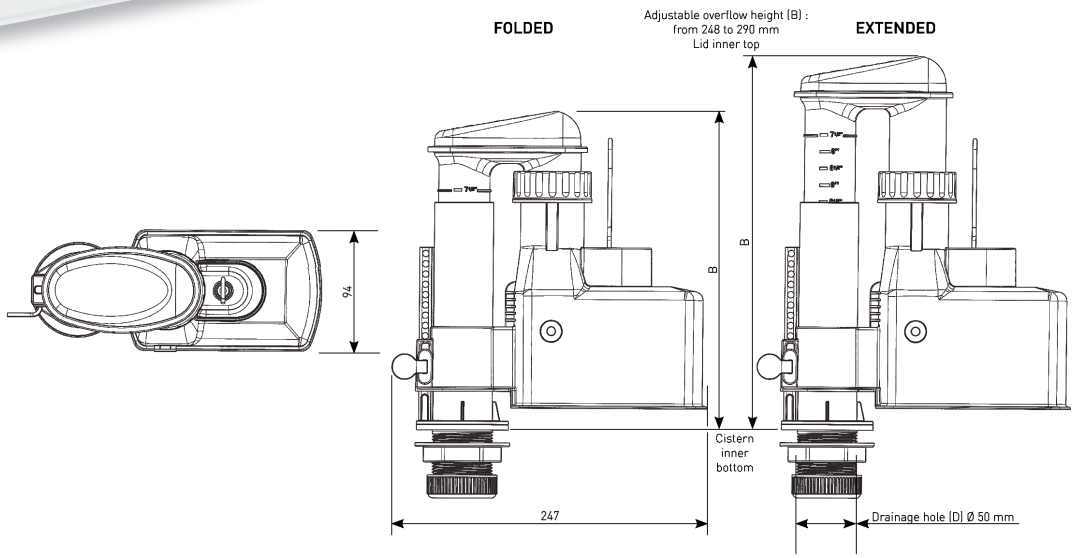

Universal Telescopic Siphon (32800007)

scan to view online technical information

Standard Component Pack

The Siamp standard component pack can be installed with most plastic or ceramic cisterns.

Features and benefits are:

- Adjustable overflow every 4mm.
- Dual flush operation.
- Adjustable small flush.
- Foam doughnut washer for compensating pan irregularity.
- 10 year manufacturer's guarantee.

The pack consisits of:

- Optima 50 c/w 470mm Cable and 2" Outlet and Button
- Additional Bayonet Strainer, Nut and Seal 1½"
- 99B ½" Plastic Inlet Valve
- Pan to Cistern Coupling Bolts
- Doughnut Washer

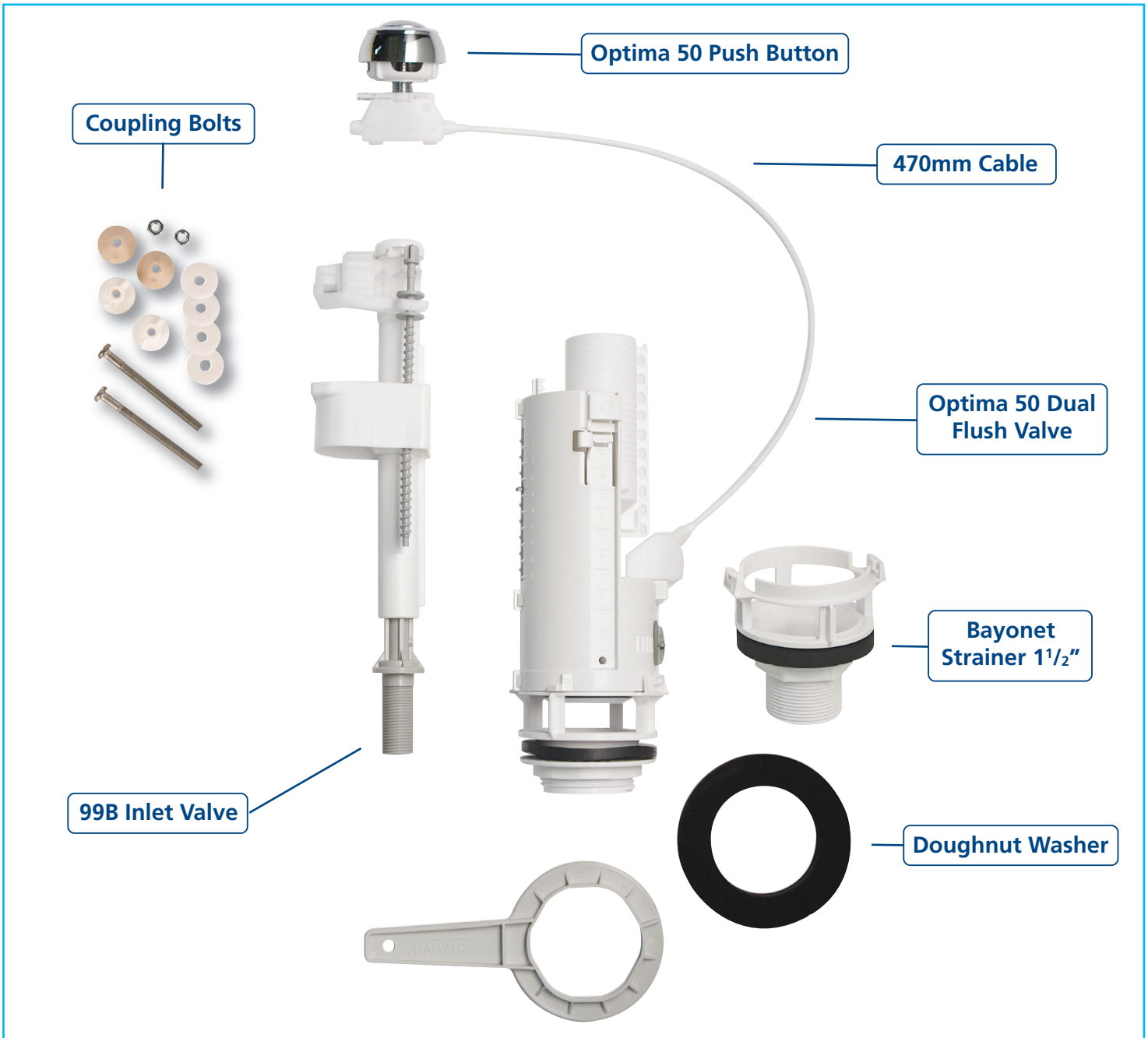

Standard Component Pack (99B) (37998007)

Deluxe Component Pack

The Siamp deluxe component pack can be installed with any plastic or ceramic cistern.

Features and benefits are:

- Height adjustable inlet valve.
- Adjustable overflow every 4mm.
- Dual flush operation.
- Adjustable small flush.
- Foam doughnut washer for compensating pan irregularity.
- 10 year manufacturer's guarantee.

The pack consisits of:

- Optima 50 c/w 470mm Cable and 2" Outlet and Button
- Additional Bayonet strainer, Nut and Seal 1½"
- 99T ½" Plastic Inlet Valve (telescopic)
- Pan to Cistern Coupling Bolts
- Doughnut Washer

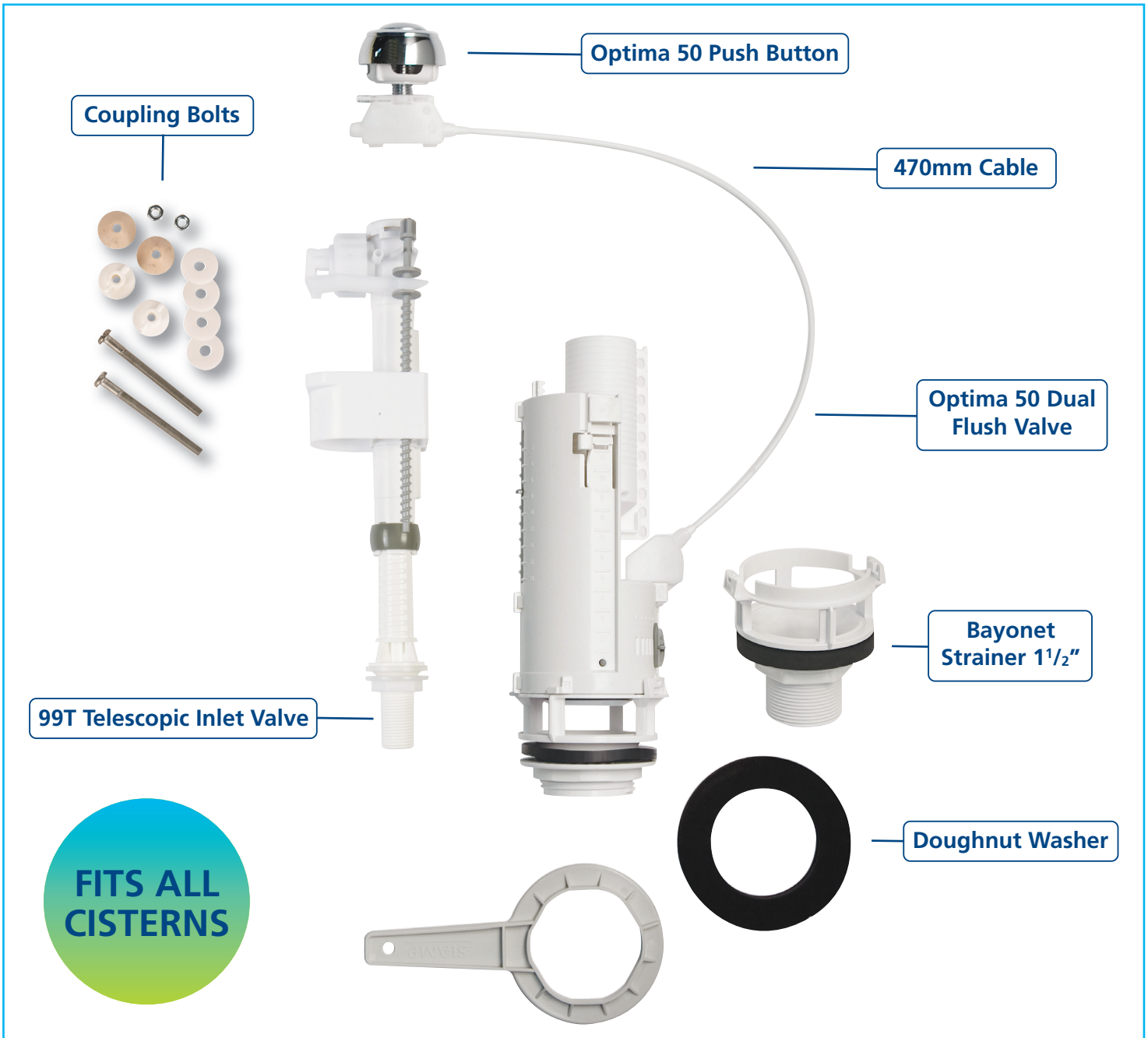

Deluxe Component Pack (99T) (37998107)

scan to view online technical information

Raised Button Component Pack

The Siamp raised button component pack can convert any plastic or ceramic cistern to accommodate less abled uses with an easy flush function.

Features and benefits are:

- Less abled push button.
- Height adjustable inlet valve
- Adjustable overflow every 4mm.
- Foam doughnut washer for compensating pan irregularity.
- 10 year manufacturer's guarantee.

The pack consisits of:

- Optima 50 c/w 470mm Cable and 2" Outlet and Raised Button
- Additional Bayonet strainer 1½"
- 99T ½" Plastic Inlet Valve (telescopic)
- Pan to Cistern Coupling Bolts
- Doughnut Washer

Raised Button Component Pack (99T) (37995207)

Flushing Valves

The Optima Range

The Optima range of flush valves are neat & compact, suitable as a direct and simple replacement for any flush valve. With the addition of a dual flush capability, enabling large water savings, which is ideal for the 'climate' conscious, and those on water meters. This range of valves are easy to install. They are serviced simply by removing the main body from the unique 'bayonet' style fitting.

Optima 49
(32490007)

Optima 50 c/w 315mm Cable and 2" Outlet (32500007)

Raised Button Optima 50 2 x Cables and 2" Outlet (32509607)

scan to view online technical information

FOR CONCEALED CISTERNS

Optima 50 c/w 470mm Cable and 2" Outlet
(32500207)

WITH ADDITIONAL 1 1/2" BAYONET STRAINER

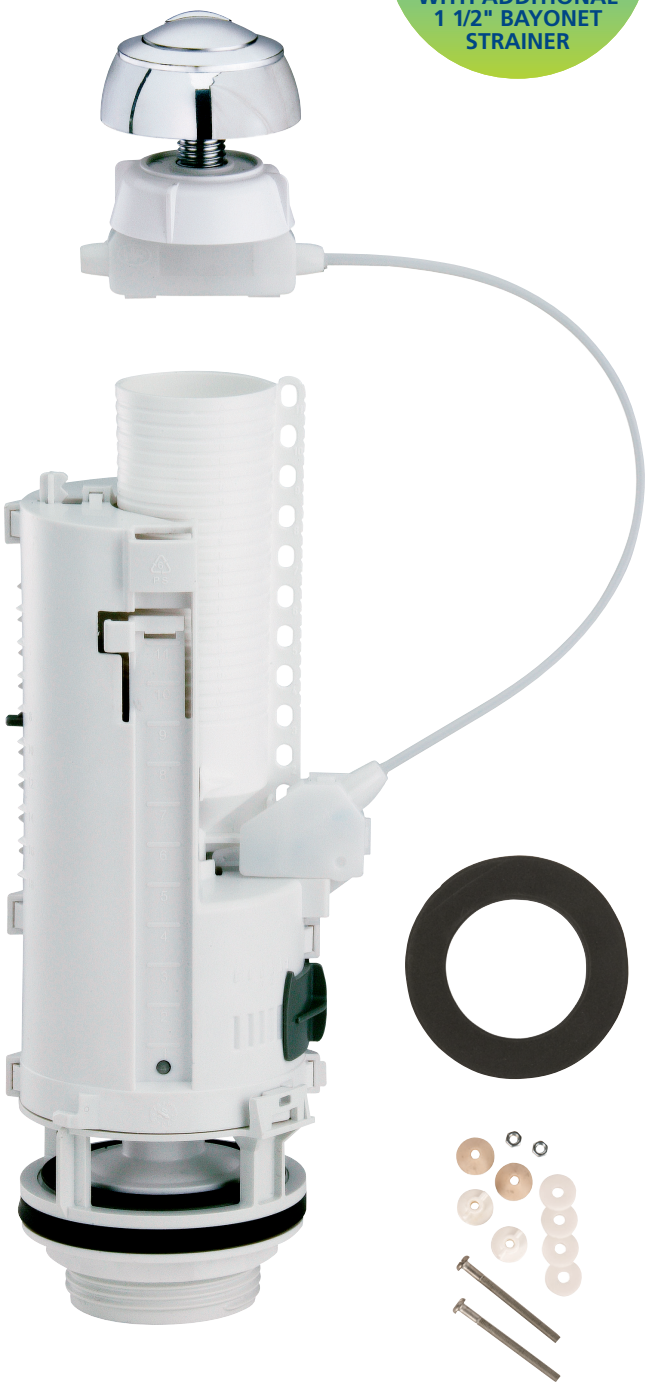

Optima 50 c/w 315mm Cable, 1½" and 2" Outlet
(32503607)

Flushing Valves

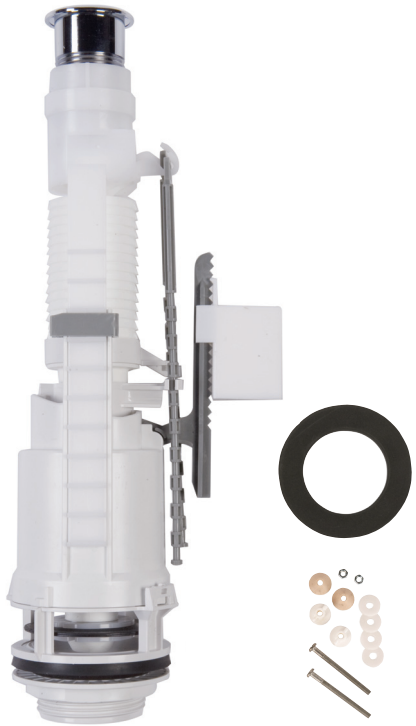

Skipper 45
(32455007)

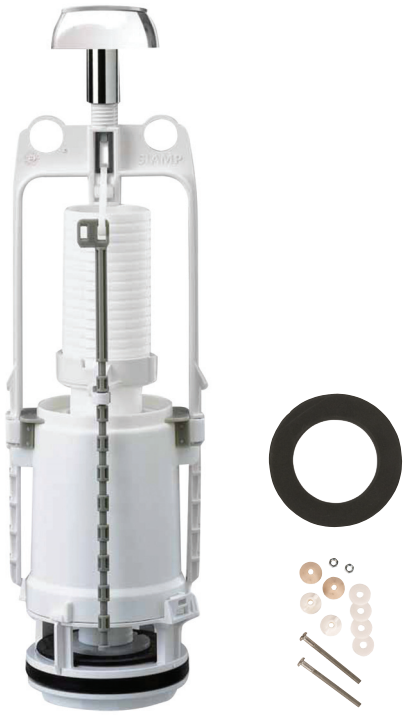

Storm 33A
(32335007)

BCM 350 Flush Valve
(32454407)

BCM 800 Flush Valve
(32454507)

scan to view online technical information

The Siamp range of inlet valves have been designed, tested and manufactured to the highest WRAS approved standards. A selection of sizes and features that include low pressure, compact and telescopic options that can cover all installations.

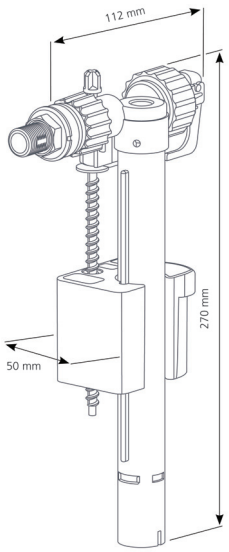

95L 3/8ths Brass
(30950007)

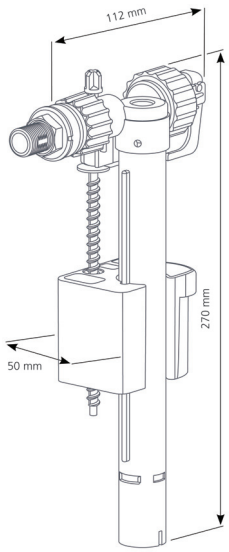

95L 1/2" Plastic
(30950607)

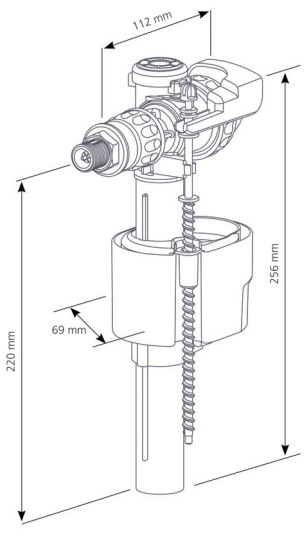

OD95L Quiet and Delayed Action
(30778007)

Low Pressure Inlet Valve

The Siamp range of water saving inlet valves combine Siamp quality and Eco H^2O Effect technology to reduce water consumption.

PRODUCT FEATURES

- Compact
- To be installed into ceramic or plastic cisterns, for replacement or as original equipment
- Hydraulic closure (no hammer shock)
- Adjustable water level
- Silent
- Anti-backflow function
- Plastic ½" fitting

	P (Bar)	Flow rate l/s
NO FILTER	0.1	0.059
	0.5	0.085
WITH FILTER	0.5	0.056
	1	0.082
	3	0.138
	5	0.168

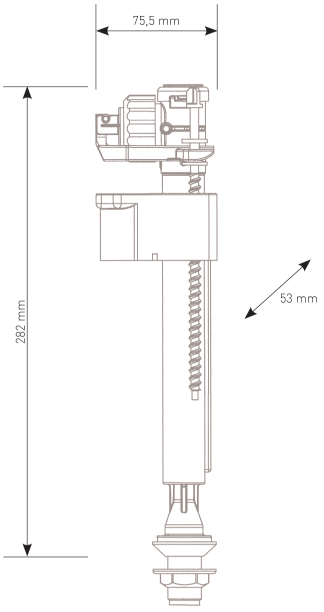

99B 1/2" Plastic Low Pressure (30996507)

scan to view online technical information

Delayed Action Inlet Valve

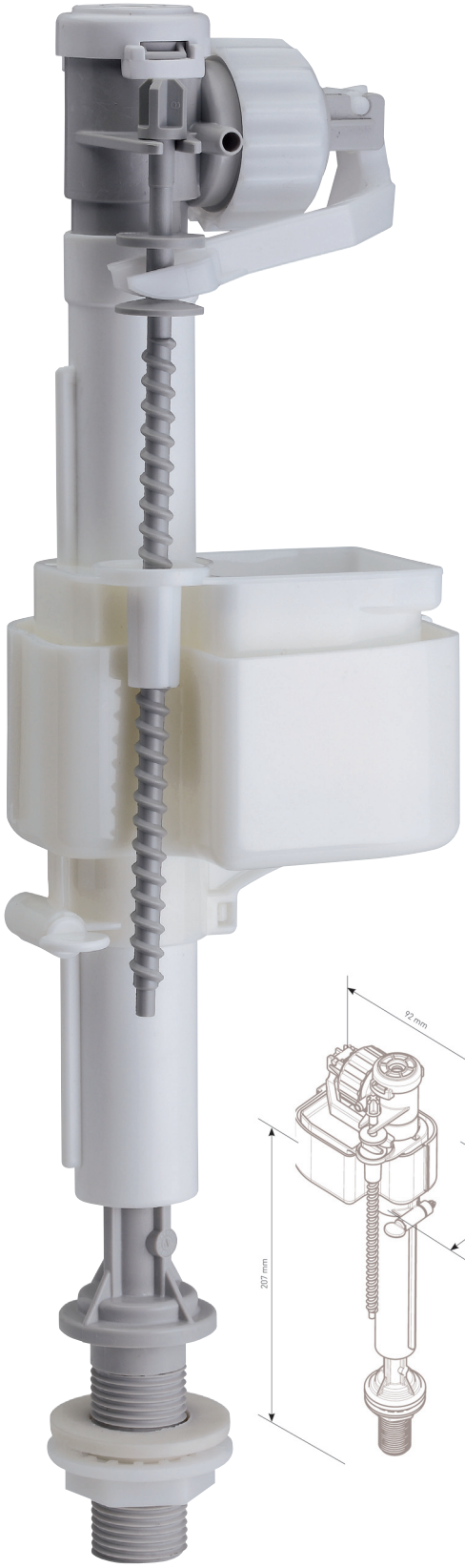

PRODUCT FEATURES

- OD 99B saves water by delaying cistern filling while flush valve is opened
- Compact
- Can be installed into ceramic or plastic cisterns, for replacement or as original equipment
- Hydraulic closure (quiet fill)
- Adjustable water level
- Anti-backflow function
- 1/2" plastic end-fitting
- Pressure function range: from 0.1 to 12 BAR
- Low pressure

WATER SAVING

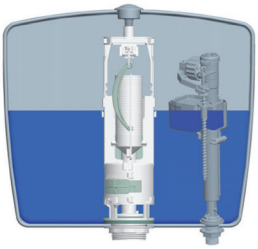

CLOSED
FLOAT VALVE

How it works?

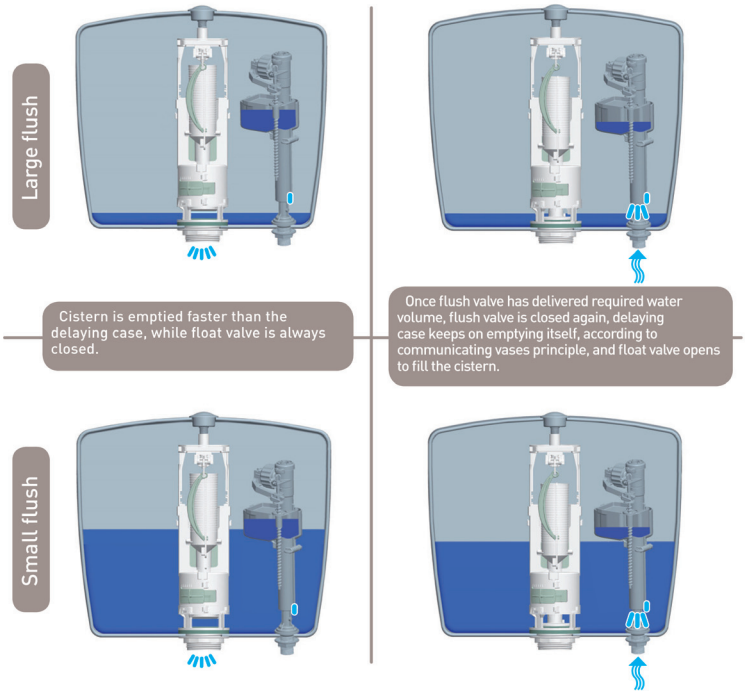

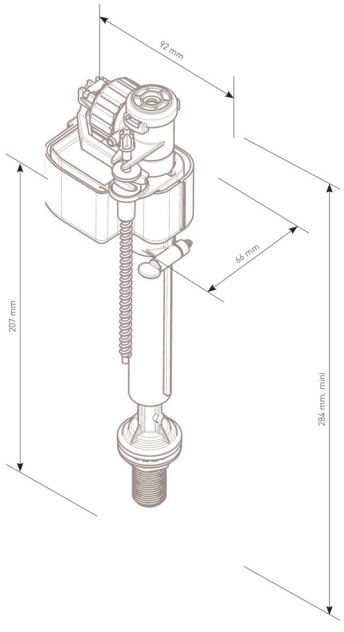

99B 1/2" Plastic Low Pressure and Delayed Action (30991107)

Inlet Valves

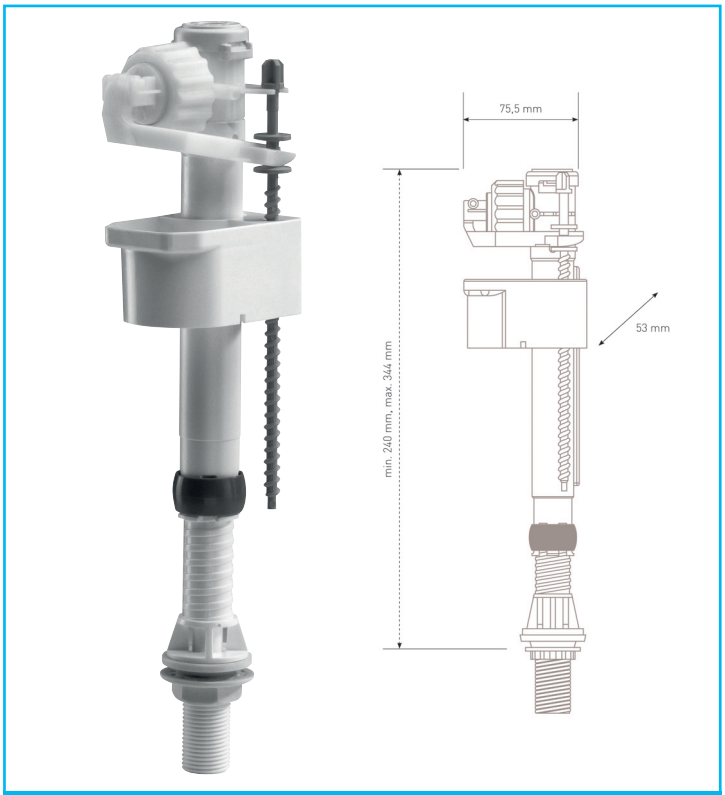

99T 1/2" Plastic
(30998007)

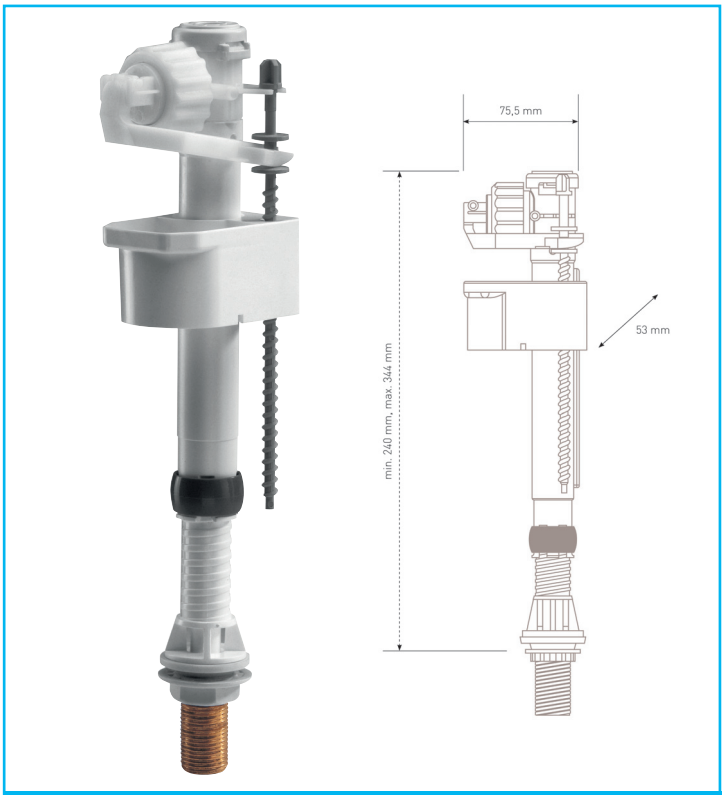

99T 3/8ths Brass
(30998207)

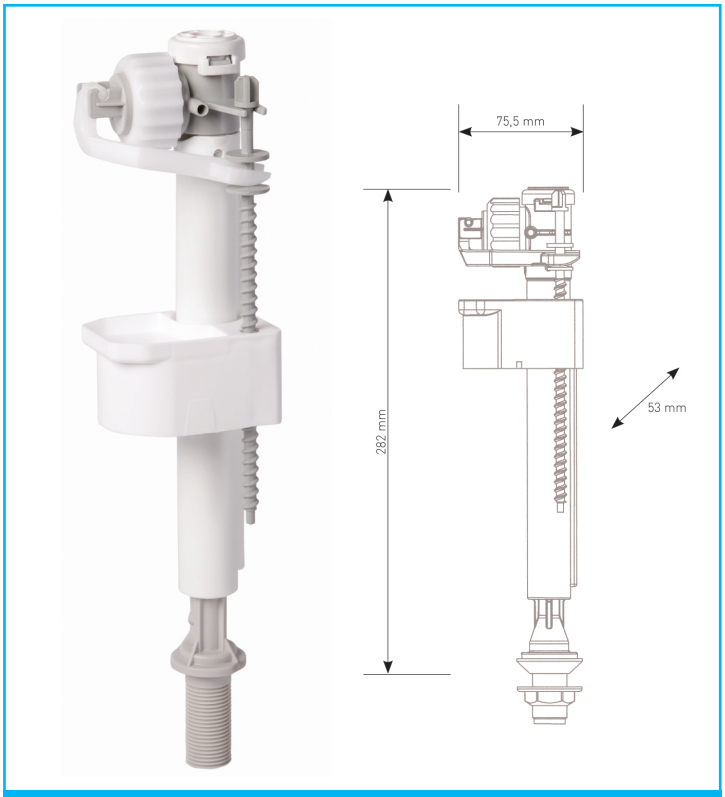

99B 1/2" Plastic
(30996007)

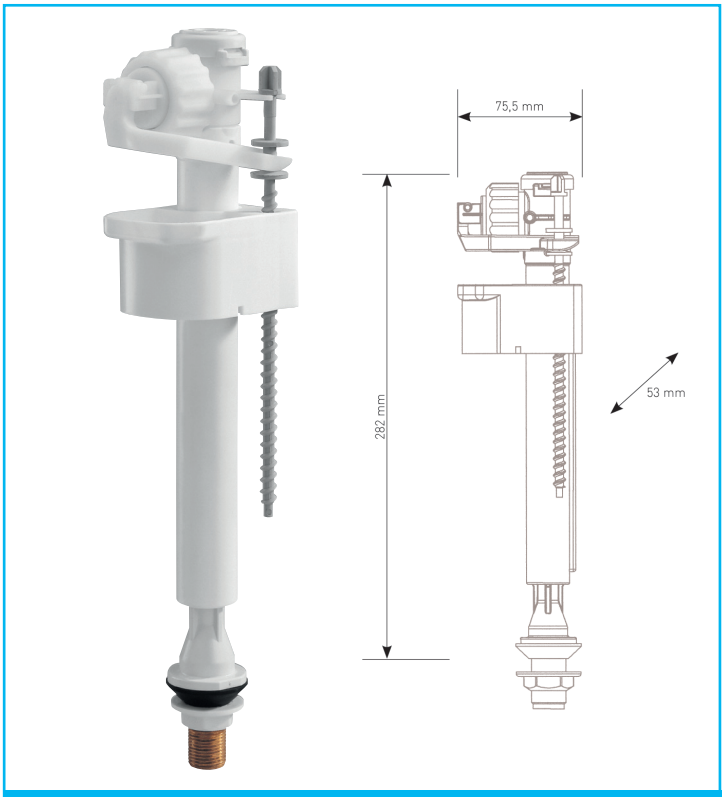

99B 3/8ths Brass (30990007)
99B 1/2" Brass (30993007)

scan to view online technical information

Siamp has also developed a full range of WC connectors, manufactured from fire resistant PVC including standard and specialist elbow pipes, reducer taps and flexible and extendable pipes.

Diaphragm Washer (34951307)

Optima Outlet Seals (34490507)

Storm/Skipper Outlet Seal (34233207)

Doughnut Washer (34031907)

Bayonet Strainer, Nut & Seal 1½" (34233907) • **Bayonet Strainer, Nut & Seal 2"** (34233307)

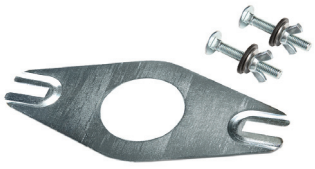

Close Coupling Plate & Bolt Set (34508207)

Unisiphon Diaphragm (34460700)

Pan to Cistern Coupling Bolts (34504120)

Back Nut Seal for Concealed Cistern (34280500)

Flush Pipe Back Nut (34591000)

Flush Pipe for the Concealed Cistern (34285000)

Flush Pipe Bung for Concealed Cistern (34286707)

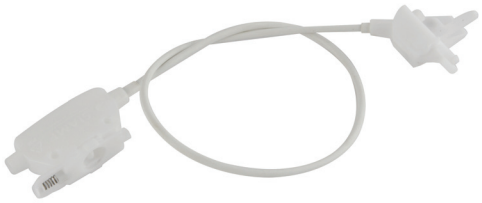

315mm Cable for Optima 50 (34498007)
470mm Cable for Optima 50 (34495300)

BCM 350 Flush Plate Fixing Screws (4) (34112207)

BCM 350 Supply Sleeve (92403007)

BCM 350/800 Flush Pipe (34017901)

R110 Reducer (92306001)

BCM 350/800 Straight Drain Kit (92401007)

BCM 350/800 Bent Drain Kit (92400007)

Push Buttons

Our wide collection of push buttons complements our range of valves.

Storm 33A Push Button
(34335007)

Skipper 45/36A Push Button
(34455007)

Optima 49 Button
(34494907)

Optima 49 Raised Button
(34505407)

Optima 50 Button
(34495007)

Optima 50 Raised Button
(34505107)

Optima 50 Button (large)
(34497107)

Single Flush Pneumatic Button White (flush)
(31253010)
Single Flush Pneumatic Button White (raised)
(31253510)

Dual Flush Pneumatic Button White (flush) (31253110)
Dual Flush Pneumatic Button Chrome (flush) (31255110)
Dual Flush Pneumatic Button White (raised) (31253610)
Dual Flush Pneumatic Button Chrome (raised) (31255610)

scan to view online technical information

Quality and standards

According to the principle of ISO 9001 version 2000, SIAMP's approach to quality is present at every stage of design, manufacture and distribution of its products.

This quality is recognised and certified by approvals of UK and International standards.

These standards certify that the manufacturing process guarantees a constant level of quality, and certify the performance of the product.

Technical support

At Siamp we are committed to providing technical support to our customers. We have a selection of online support instructions including:

- ✔ Installation instructions
- ✔ Technical drawings
- ✔ Product information
- ✔ Troubleshooting guides
- ✔ Troubleshooting videos

Simply visit www.siamp.co.uk for further information.

Siamp UK Limited
Siamp House, 7 Monsall Road, Newton Heath
Manchester. M40 8FY

Tel: 0161 205 1200 • Fax: 0161 205 1212 • Web: www.siamp.co.uk
Enquiries: info@siamp.co.uk • Technical Support: aftersales@siamp.co.uk

Version 2 March 2013